Soft Close and Full Extension drawer with Dovetail Construction
Matching Finish throughout the Interior
Extend design with Optional 12″, 15″ & 18″ Drawer Bridge and 15″ Shelf Bridge
Matching Mirror, Medicine Cabinet, Wall Cabinet, Side Cabinet and Linen Tower

All Ronbow cabinets are made of solid hardwood or hardwood plywood and meet strict CARB Standards.
No particle Board or Micro-Density Fiberboard (MDF) are used.

Available finishes:

DARK CHERRY H01

Available tops:

CERAMIC SINKTOP
TECHSTONE™ TOP
WIDEAPPEAL™ TOP

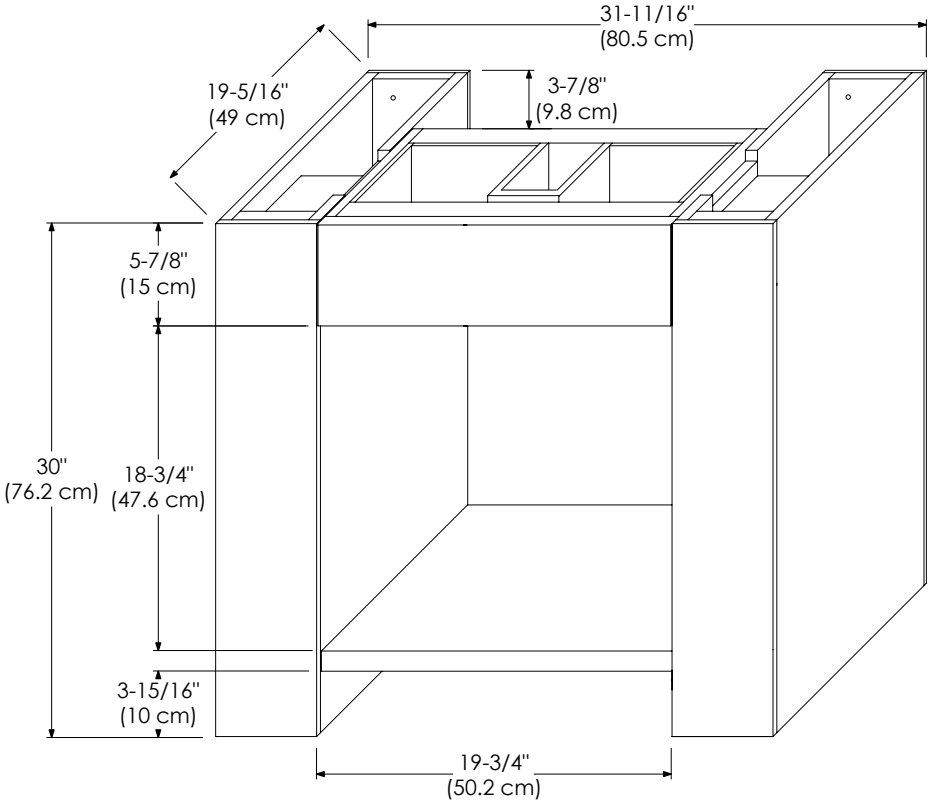

DRAWER

Exterior dimensions

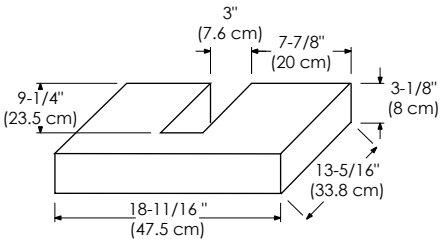

Inner dimensions

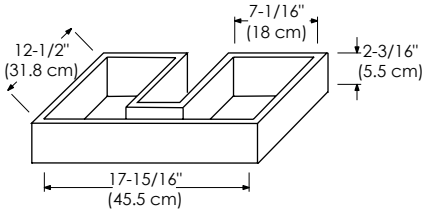

BACK PANEL AND CUT HOLE

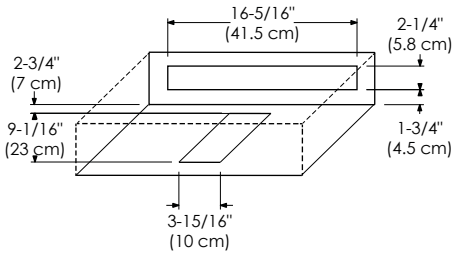

Soft Close and Full Extension drawer with Dovetail Construction
Matching Finish throughout the Interior
Extend design with Optional 12″, 15″ & 18″ Drawer Bridge and 15″ Shelf Bridge
Matching Mirror, Medicine Cabinet, Wall Cabinet, Side Cabinet and Linen Tower

All Ronbow cabinets are made of solid hardwood or hardwood plywood and meet strict CARB Standards.
No particle Board or Micro-Density Fiberboard (MDF) are used.

Available finishes:

DARK CHERRY H01

Available tops:

CERAMIC SINKTOP
TECHSTONE™ TOP
WIDEAPPEAL™ TOP

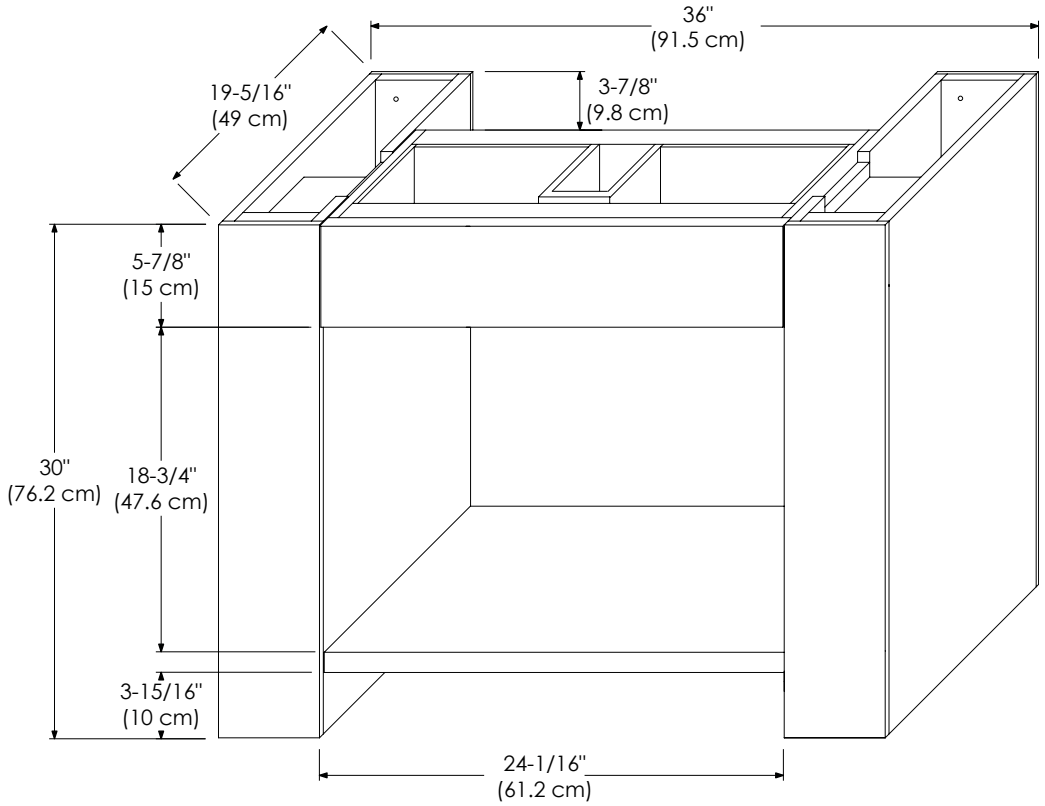

DRAWER

Exterior dimensions

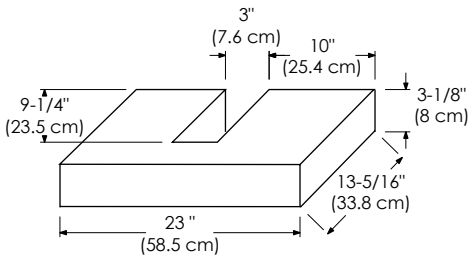

Inner dimensions

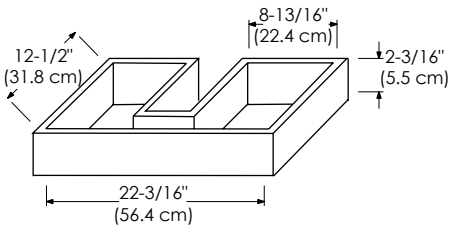
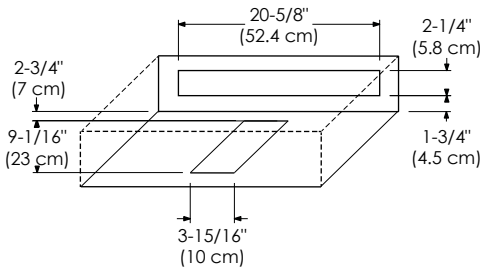
BACK PANEL AND CUT HOLE