MODEL: 216624-1-WH
216624-8-WH

SINKS AS SINKTOP

Ceramic self-rimming vessel with overflow (non-standard)

Codes/Standards Applicable
Specified model meets or exceeds the following:
- ASME A112.19.2
- IAPMO/cUPC®
- CSA B45
- CMR 248

Available Colors:
WHITE WH

Faucet:
SINGLE FAUCET HOLE
8″ WIDESPREAD

TOP

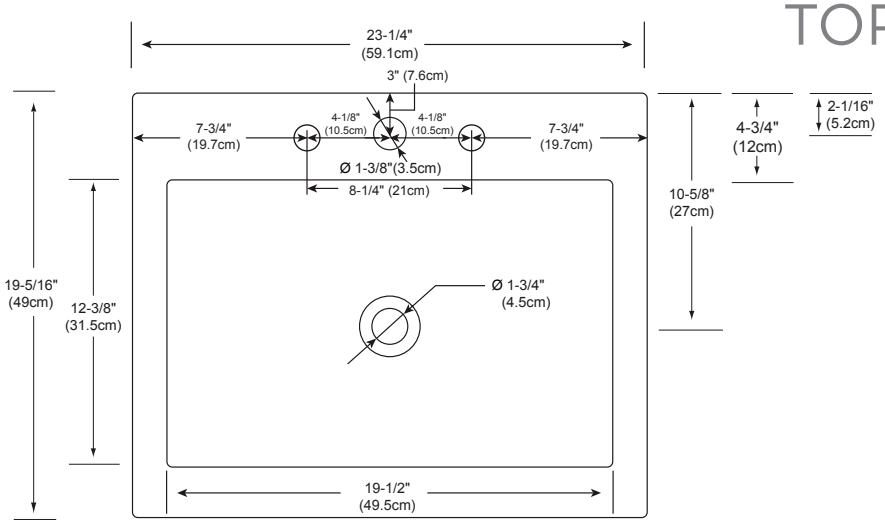

FRONT

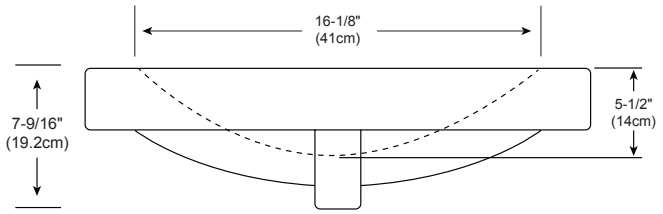

SIDE

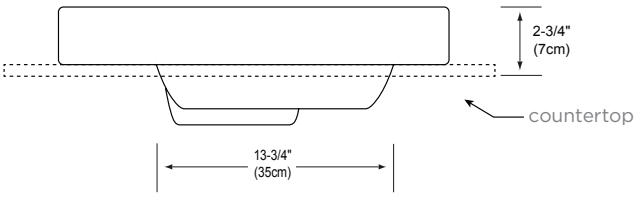

By IAPMO, ceramic lavatory warpage is defective only if warpage of flat slab out of horizontal plane exceeds 6.3 mm/m (0.25 in/ft) on all sizes OR warpage on back of lavatories that are attached to the wall exceeds 3 mm (0.13 in).