WIDEAPPEAL™ TOP 25″ / 31″ / 37″ / 43″ / 49″ / 61″

RONBOW

MODEL: 303325-1-COLOR 363325-1-COLOR
303325-8-COLOR 363325-8-COLOR

SPECIFICATION SHEET

VANITY TOPS

Wideappeal™ Top for undercounter sink (standard)

Available Colors:

CREAM BEIGE MARBLE MY

SOLID WHITE TECHSTONE™ Q01

BROAD BLACK TECHSTONE™ Q02

GRAND GREEN TECHSTONE™ Q27

STONE GRAY TECHSTONE™ Q30

Faucet:

SINGLE FAUCET HOLE

8″ WIDESPREAD

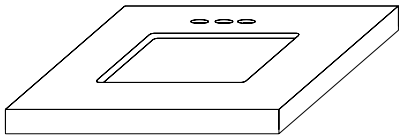

TOP VIEW

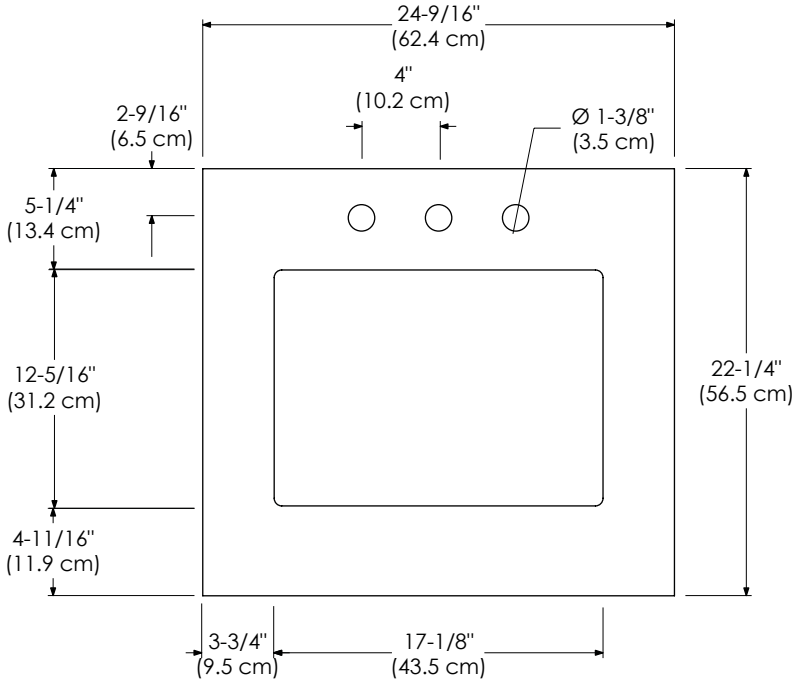

FRONT VIEW

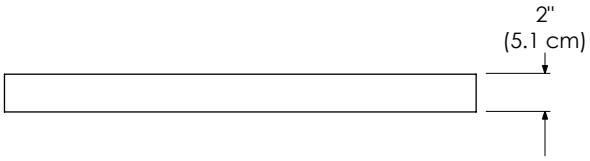

WIDEAPPEAL™ TOP 25″ / **31″** / 37″ / 43″ / 49″ / 61″

RONBOW

MODEL: 303331-1-COLOR 363331-1-COLOR
303331-8-COLOR 363331-8-COLOR

SPECIFICATION SHEET

VANITY TOPS

Wideappeal™ Top for undercounter sink (standard)

Available Colors:

CREAM BEIGE MARBLE MY

SOLID WHITE TECHSTONE™ Q01

BROAD BLACK TECHSTONE™ Q02

GRAND GREEN TECHSTONE™ Q27

STONE GRAY TECHSTONE™ Q30

Faucet:

SINGLE FAUCET HOLE

8″ WIDESPREAD

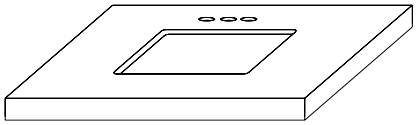

TOP VIEW

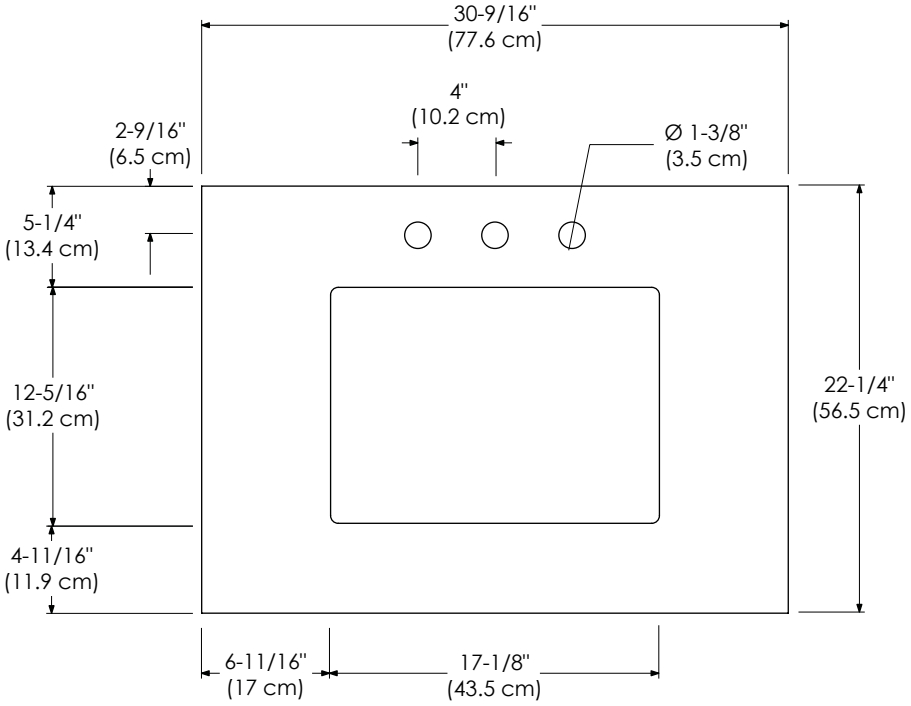

FRONT VIEW

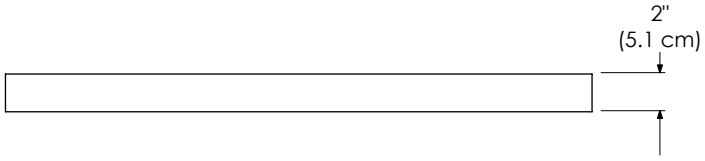

WIDEAPPEAL™ TOP 25″ / 31″ / **37″** / 43″ / 49″ / 61″

RONBOW

MODEL: 303337-1-COLOR 363337-1-COLOR
303337-8-COLOR 363337-8-COLOR

SPECIFICATION SHEET

VANITY TOPS

Wideappeal™ Top for undercounter sink (standard)

Available Colors:

CREAM BEIGE MARBLE MY
SOLID WHITE TECHSTONE™ Q01
BROAD BLACK TECHSTONE™ Q02
GRAND GREEN TECHSTONE™ Q27
STONE GRAY TECHSTONE™ Q30

Faucet:

SINGLE FAUCET HOLE
8″ WIDESPREAD

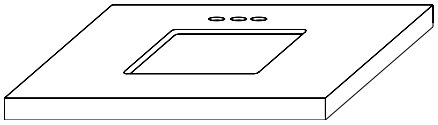

TOP VIEW

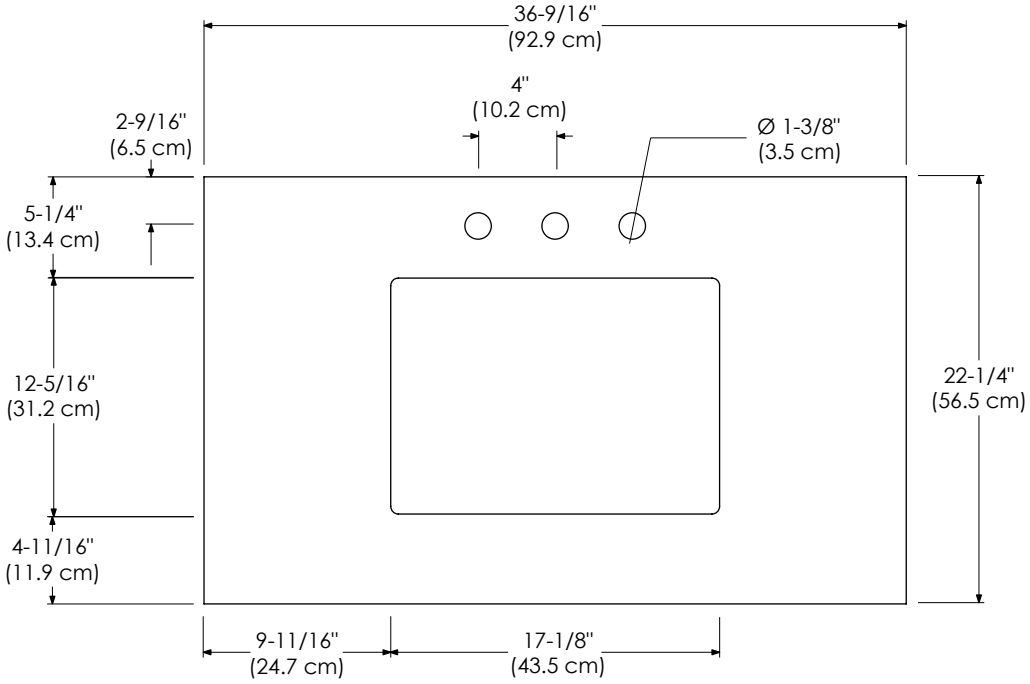

FRONT VIEW

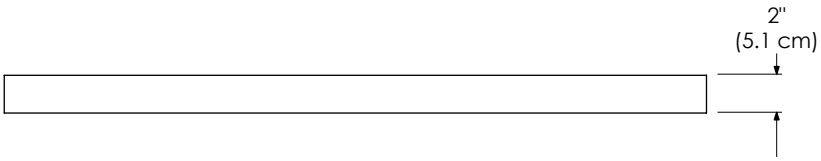

WIDEAPPEAL™ TOP 25″ / 31″ / 37″ / **43″** / 49″ / 61″

RONBOW

MODEL: 303343-1-COLOR 363343-1-COLOR
303343-8-COLOR 363343-8-COLOR

SPECIFICATION SHEET

VANITY TOPS

Wideappeal™ Top for undercounter sink (standard)

Available Colors:

CREAM BEIGE MARBLE MY
SOLID WHITE TECHSTONE™ Q01
BROAD BLACK TECHSTONE™ Q02
GRAND GREEN TECHSTONE™ Q27
STONE GRAY TECHSTONE™ Q30

Faucet:

SINGLE FAUCET HOLE
8″ WIDESPREAD

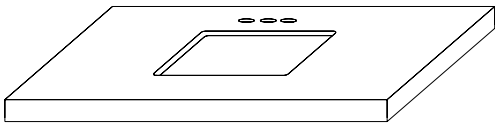

TOP VIEW

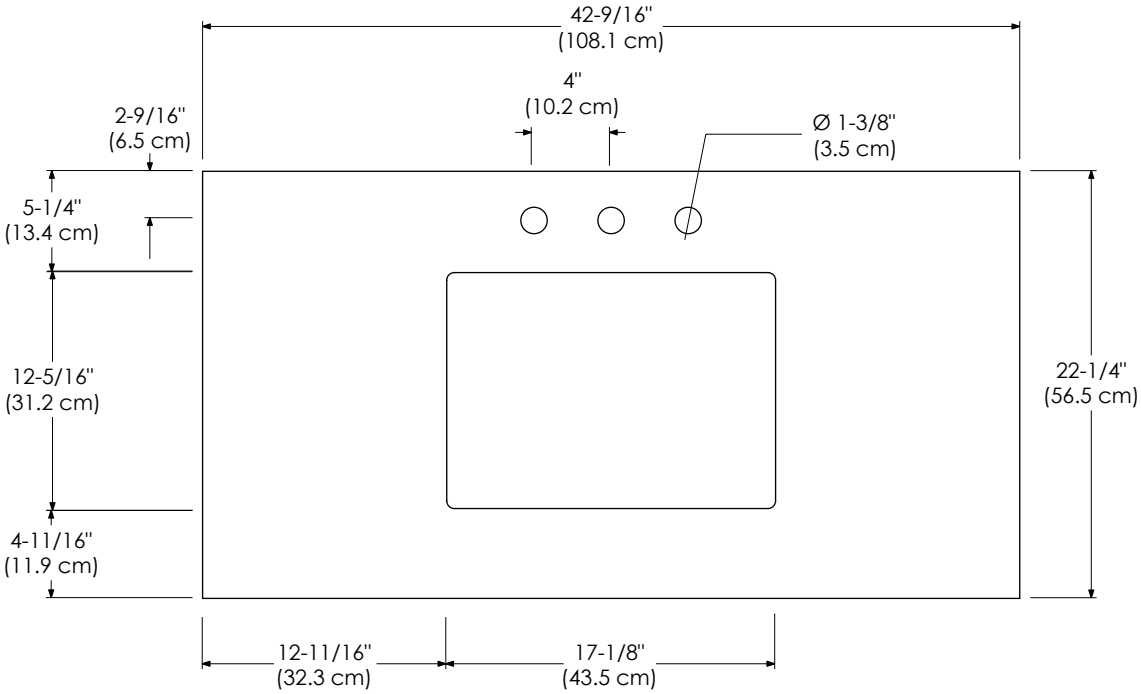
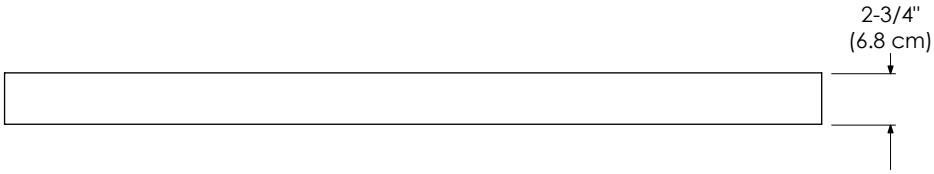
FRONT VIEW