TORINO STONE TOP 31″ / 37″ / 48″ / 61″ / 73″

RONBOW

MODEL: 308031-8-COLOR

SPECIFICATION SHEET

VANITY TOPS

Fitted stone top

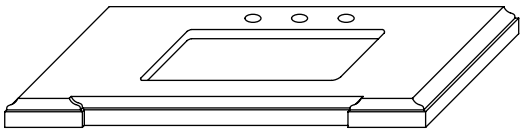

Available Colors:

CARRARA WHITE MARBLE CW

CREAM BEIGE MARBLE MY

Faucet:

8″ WIDESPREAD

TOP VIEW

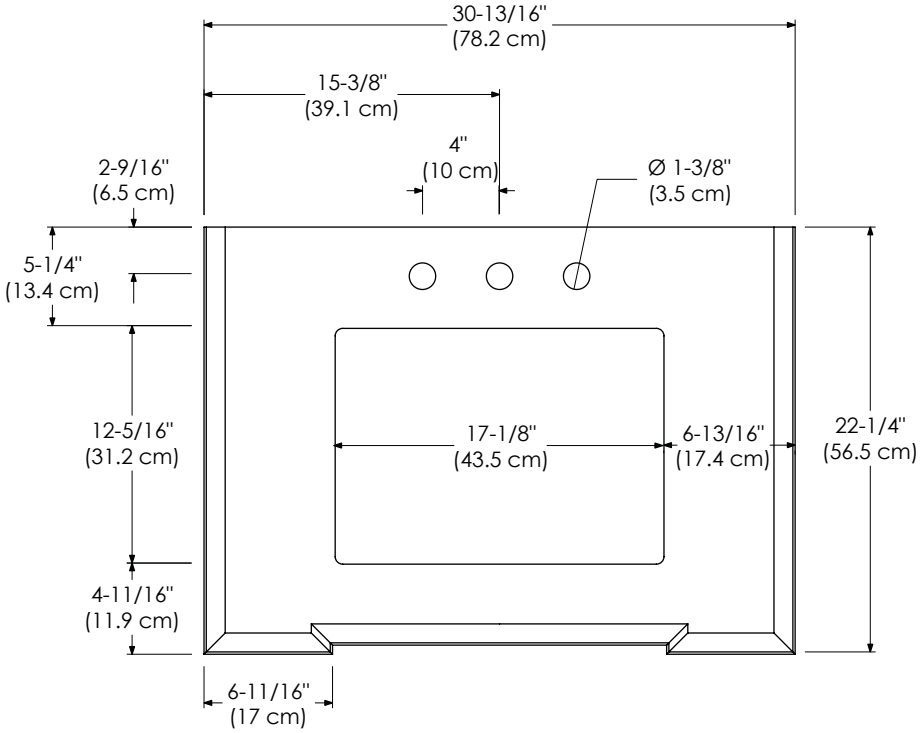

FRONT VIEW

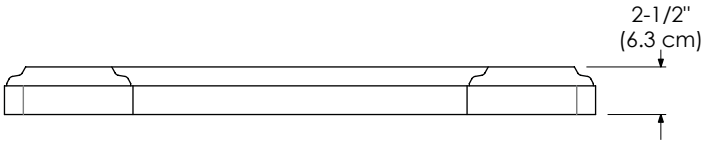

TORINO STONE TOP 31″ / 37″ / 48″ / 61″ / 73″

RONBOW

MODEL: 308037-8-COLOR

SPECIFICATION SHEET

VANITY TOPS

Fitted stone top

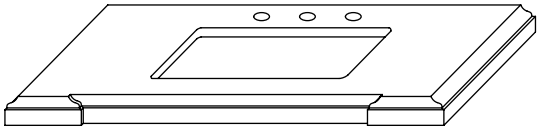

Available Colors:

CARRARA WHITE MARBLE CW

CREAM BEIGE MARBLE MY

Faucet:

8″ WIDESPREAD

TOP VIEW

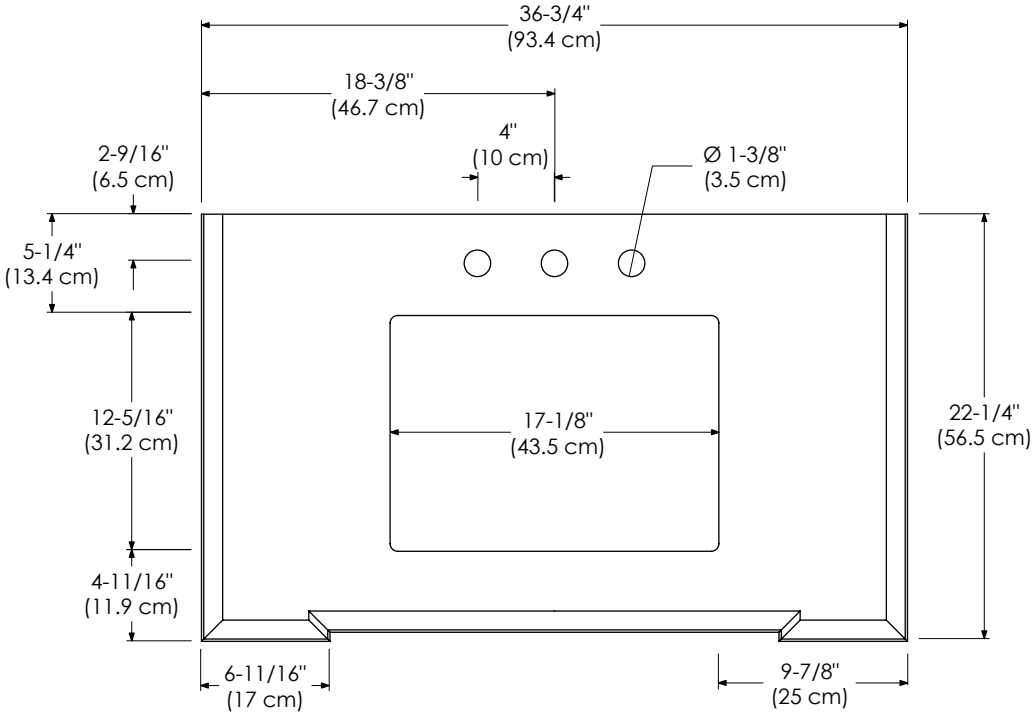

FRONT VIEW

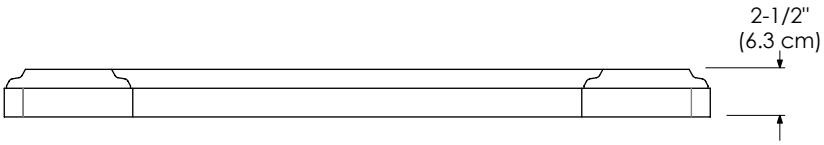

TORINO STONE TOP 31″ / 37″ / **48″** / 61″ / 73″

RONBOW

MODEL: 308049-8-COLOR

SPECIFICATION SHEET

VANITY TOPS

Fitted stone top

Available Colors:

CARRARA WHITE MARBLE CW

CREAM BEIGE MARBLE MY

Faucet:

8″ WIDESPREAD

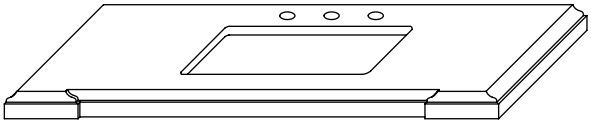

TOP VIEW

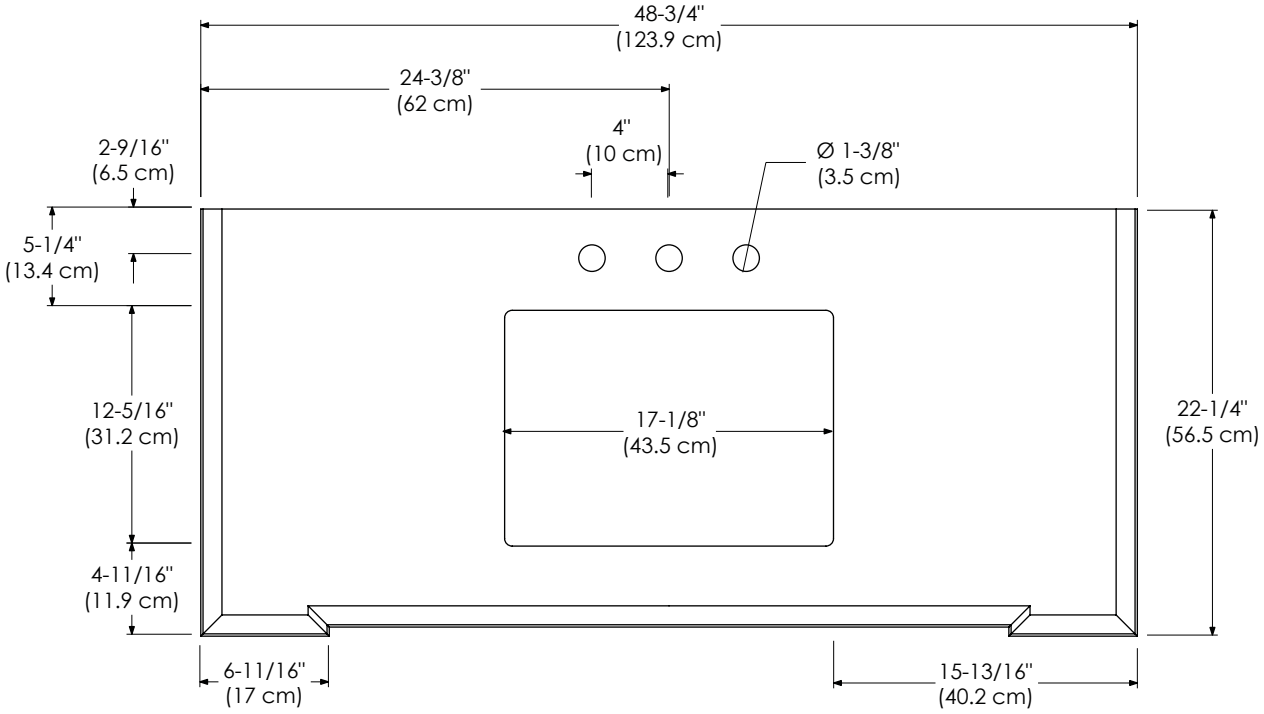
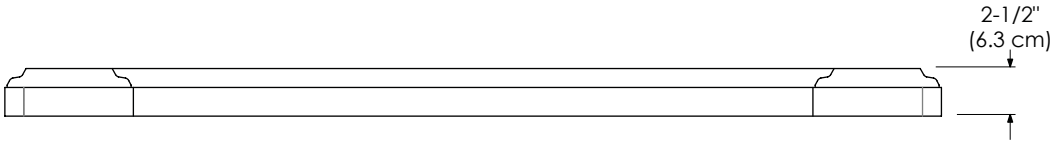
FRONT VIEW