Installation Sheet

ROWENA 24”/32”/36”

RONBOW®

Vanity: 500030, 500033 **Drawer:** 667025, 667033, 667037

Contempo Collection

For installing GLASS top:

Screw on chrome spacers (parts A, B, & C) to leg support. Glass top is placed on top of spacers.

For installing WOOD top:

Chrome spacers (parts A, B, & C) maybe used but not necessary. Wood top may be placed on spacers or may be glued to leg supports by using silicone adhesives.

For installing STONE top:

Discard chrome spacers and use silicone adhesive to secure top to leg support.

For installing towel bar (T):

Drill towel bar holders (part F) into each leg support and insert towel bar (T). Use set screw (part G) to tighten.

For installing leg support:

Drill screws (parts D &E) into wall through holes in leg supports. There should be 4 holes per each leg support. Please make sure there is proper support behind the wall in your drill location. Different wall materials may require different screw types. Please consult your local hardware store.

For installing bottom shelf(s):

The bottom shelf rests on the bottom ledge of the leg supports. No adhesives are necessary.

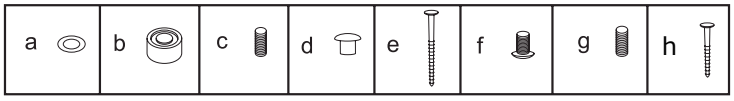

Note: Towel bar (T), bottom Drawer and Bottom Shelf (S) are optional and it must be purchased separately.

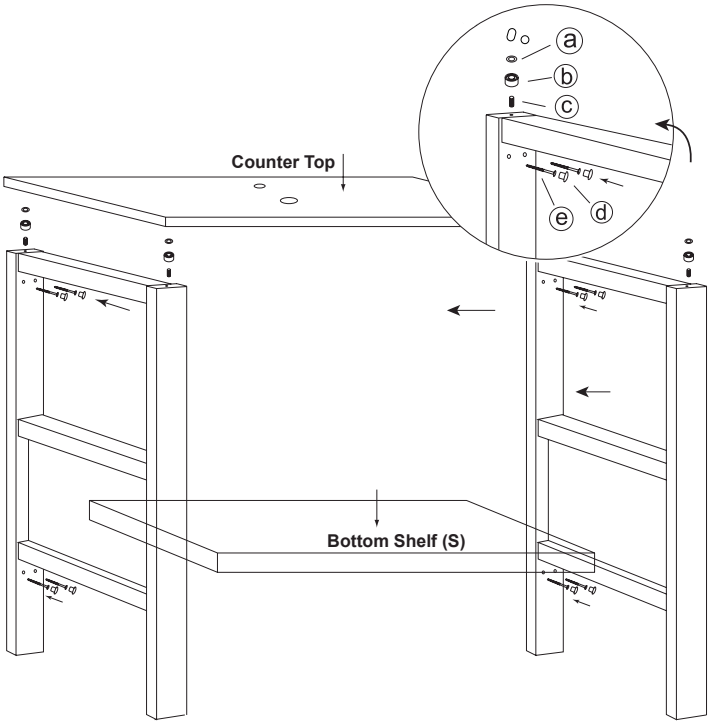

Installing Bottom Drawer

Step 1: Release the lever on each side, according to the arrows and pull out drawer.

Step 2: screw to the side of the stand

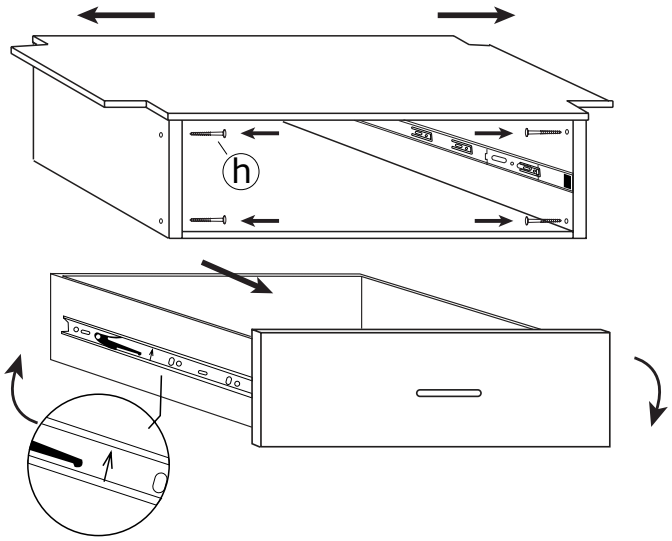

Ronbow Corporation, All Rights Reserved.

Installation Sheet

ROWENA 24”/32”/36”

RONBOW®

Vanity: 500030, 500033 **Drawer:** 667025, 667033, 667037

Contempo Collection

Note : This is for installing Glass Sinktop

Step 1 : Screw in 4 countertop spacers ① into the holes provided on top of the cabinet

See Figure 1.

Step 2 : Position and set vanity top on cabinet

See Figure 1.

Step 3 : Place a generous portion of plumbers’ putty under drain cap and insert whole drain body inside the bowl and through the countertop.

(There may be a small beveled rubber washer packaged with your drain, please discard this and use plumbers’ putty instead)

See Figure 2.

Step 4 : From under the drain, insert the thick rubber washer and screw on and tighten the metal nut. Remove excess plumbers’ putty

See Figure 3.

Step 5 : Attach p-trap to tailpiece.

Figure 1.

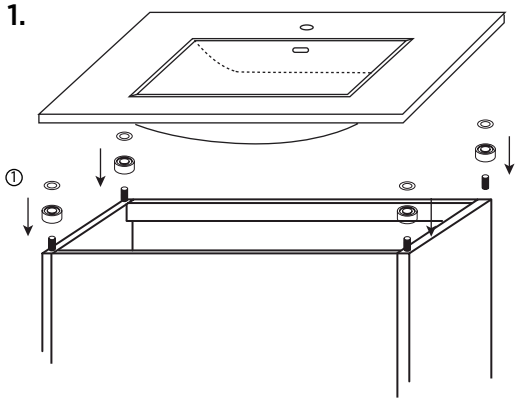

Figure 2.

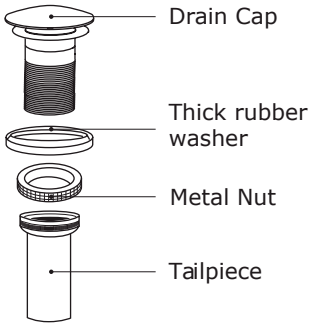

Figure 3.

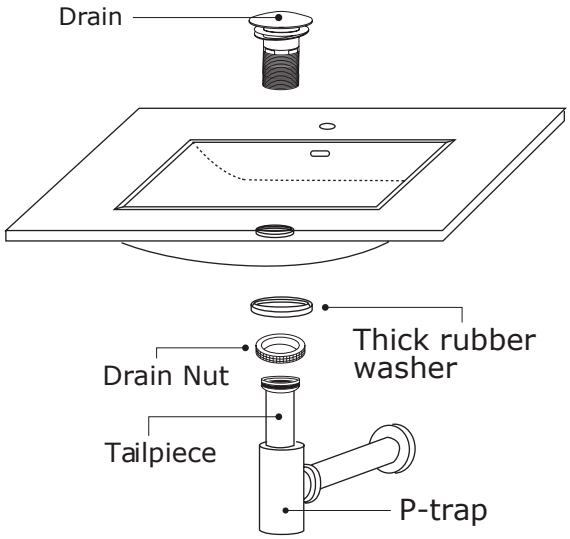

Ronbow Corporation, All Rights Reserved.

Installation Sheet

ROWENA 24”/32”/36”

RONBOW®

Vanity: 500030
500033

Drawer: 667025
667033
667037

Contempo Collection

Note : This is for installing Ceramic Sinktop

Step 1 : Place adhesive around top of cabinet

See Figure 1.

Figure 1.

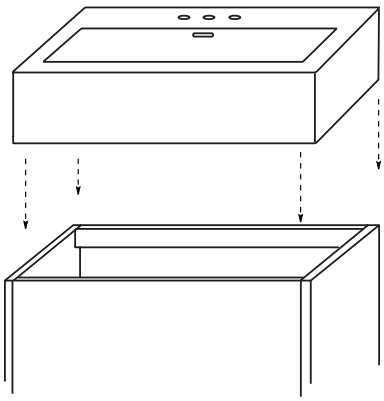

Step 2 : Place a generous portion of plumbers’ putty under drain cap and insert whole drain body inside the bowl and through the countertop

(There may be a small beveled rubber washer packaged with your drain, please discard this and use plumbers’ putty instead)

See Figure 2.

Figure 2.

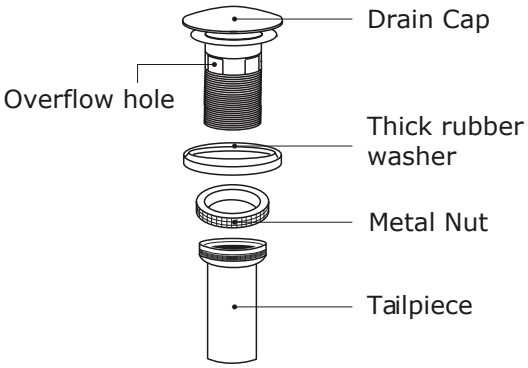

Step 3 : From under the drain, insert the thick rubber washer and screw on and tighten the metal nut. Remove excess plumbers’ putty

See Figure 3.

Figure 3.

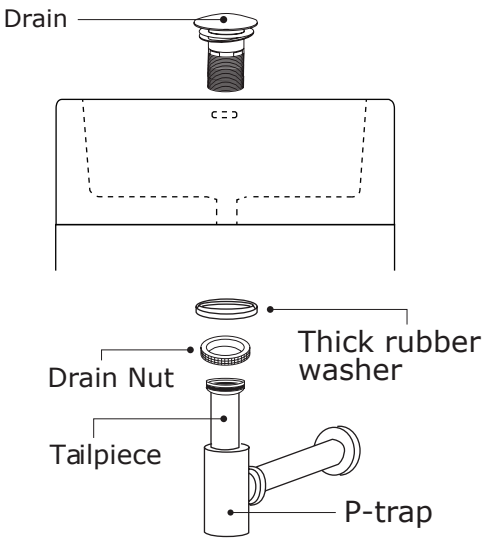

Step 4 : Attach p-trap to tailpiece

Ronbow Corporation, All Rights Reserved.

Installation Sheet

ROWENA 24”/32”/36”

RONBOW®

Vanity: 500030, 500033 **Drawer:** 667025, 667033, 667037

Contempo Collection

For installing GLASS top:

Screw on chrome spacers (parts A, B, & C) to leg support. Glass top is placed on top of spacers.

For installing WOOD top:

Chrome spacers (parts A, B, & C) maybe used but not necessary. Wood top may be placed on spacers or may be glued to leg supports by using silicone adhesives.

For installing STONE top:

Discard chrome spacers and use silicone adhesive to secure top to leg support.

For installing towel bar (T):

Drill towel bar holders (part F) into each leg support and insert towel bar (T). Use set screw (part G) to tighten.

For installing leg support:

Drill screws (parts D &E) into wall through holes in leg supports. There should be 4 holes per each leg support. Please make sure there is proper support behind the wall in your drill location. Different wall materials may require different screw types. Please consult your local hardware store.

For installing bottom shelf(s):

The bottom shelf rests on the bottom ledge of the leg supports. No adhesives are necessary.

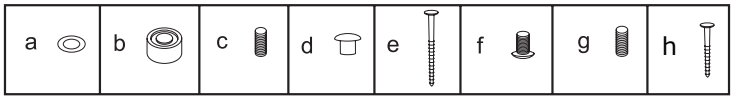

Note: Towel bar (T), bottom Drawer and Bottom Shelf (S) are optional and it must be purchased separately.

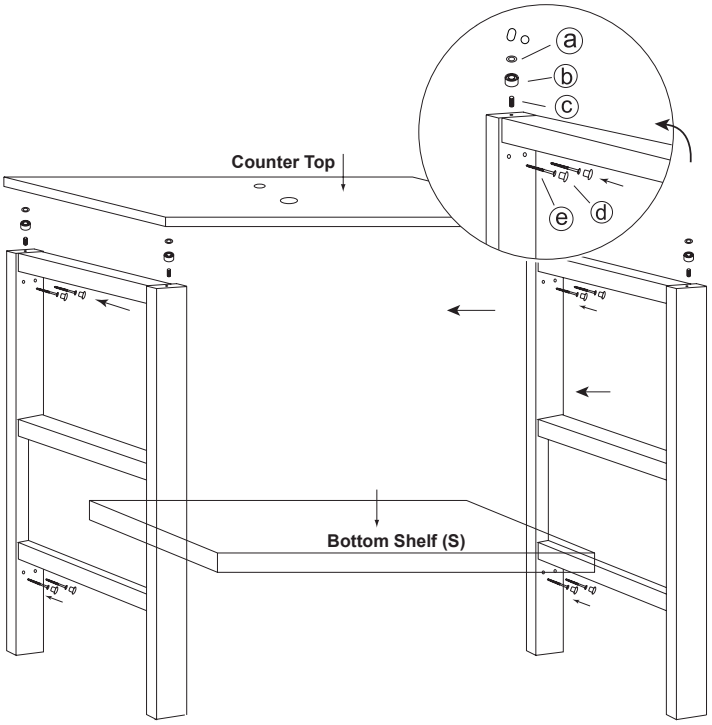

Installing Bottom Drawer

Step 1: Release the lever on each side, according to the arrows and pull out drawer.

Step 2: screw to the side of the stand

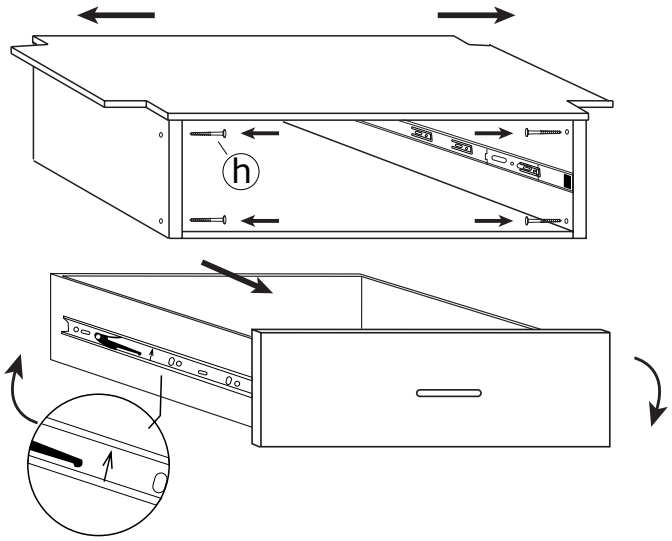

Ronbow Corporation, All Rights Reserved.

Installation Sheet

ROWENA 24”/32”/36”

RONBOW®

Vanity: 500030, 500033 **Drawer:** 667025, 667033, 667037

Contempo Collection

Note : This is for installing Glass Sinktop

Step 1 : Screw in 4 countertop spacers ① into the holes provided on top of the cabinet

See Figure 1.

Step 2 : Position and set vanity top on cabinet

See Figure 1.

Step 3 : Place a generous portion of plumbers’ putty under drain cap and insert whole drain body inside the bowl and through the countertop.

(There may be a small beveled rubber washer packaged with your drain, please discard this and use plumbers’ putty instead)

See Figure 2.

Step 4 : From under the drain, insert the thick rubber washer and screw on and tighten the metal nut. Remove excess plumbers’ putty

See Figure 3.

Step 5 : Attach p-trap to tailpiece.

Figure 1.

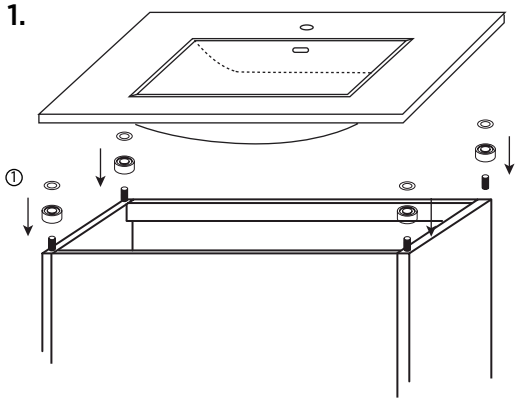

Figure 2.

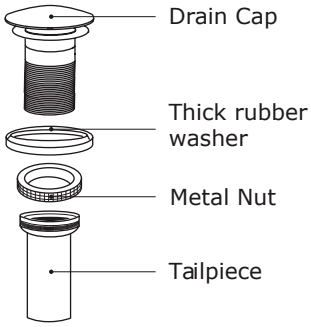

Figure 3.

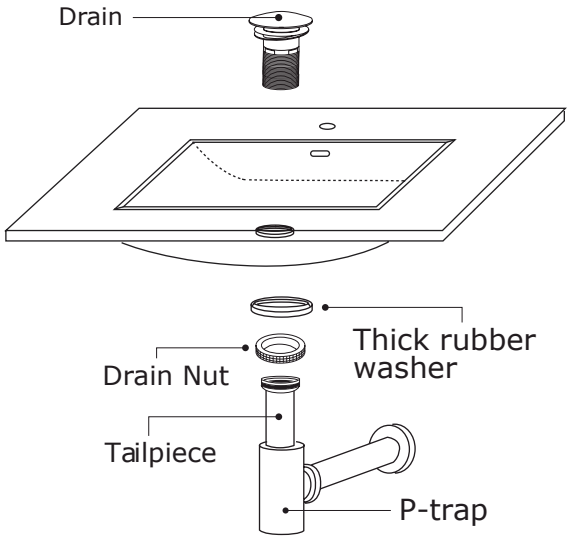

Ronbow Corporation, All Rights Reserved.

Installation Sheet

ROWENA 24”/32”/36”

RONBOW®

Vanity: 500030
500033

Drawer: 667025
667033
667037

Contempo Collection

Note : This is for installing Ceramic Sinktop

Step 1 : Place adhesive around top of cabinet

See Figure 1.

Figure 1.

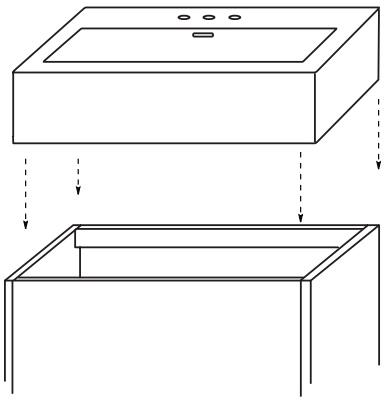

Step 2 : Place a generous portion of plumbers’ putty under drain cap and insert whole drain body inside the bowl and through the countertop

(There may be a small beveled rubber washer packaged with your drain, please discard this and use plumbers’ putty instead)

See Figure 2.

Figure 2.

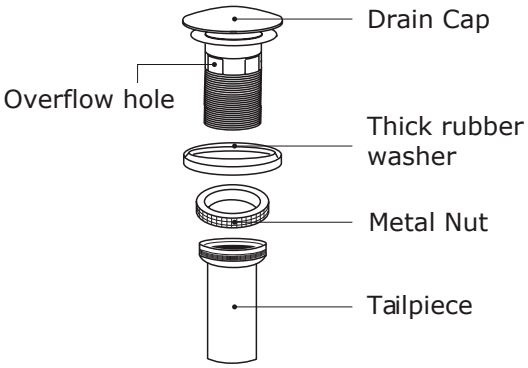

Step 3 : From under the drain, insert the thick rubber washer and screw on and tighten the metal nut. Remove excess plumbers’ putty

See Figure 3.

Figure 3.

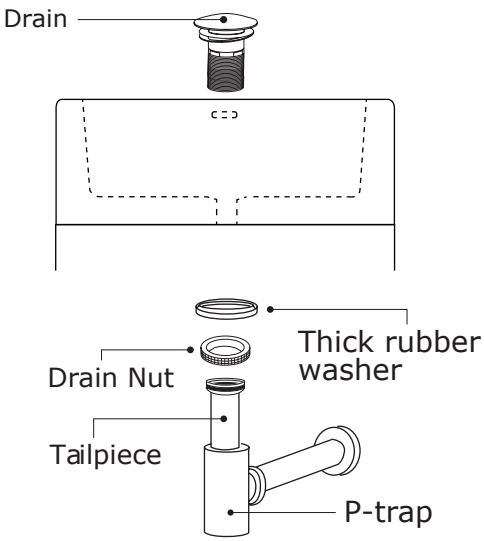

Step 4 : Attach p-trap to tailpiece

Ronbow Corporation, All Rights Reserved.