MODEL: 030323
030331

CONTEMPO COLLECTION

**NOTE:** For installing under counter sink with counter top.

**STEP 1:** Apply adhesive caulking around the topside of rim near the edge. Carefully raise sink in place, align, and press firmly.
*See Figure 1.*

**Figure 1.**

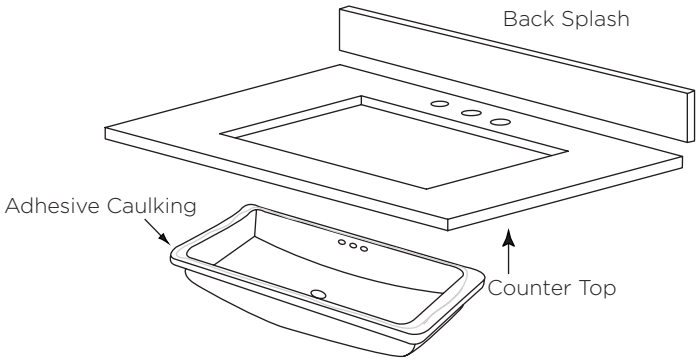


**STEP 2:** Attach 4 undermount-clips to hold lavatory in place
*See Figure 2.*

**Figure 2.**

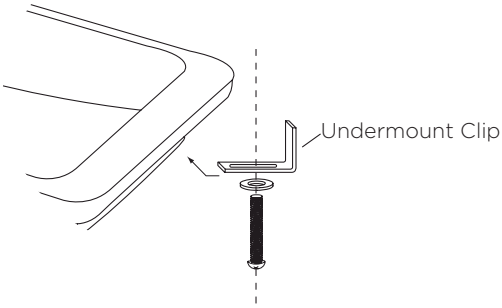


**STEP 3:** Secure top & back splash to cabinet by using adhesive caulk
*See Figure 3.*

**Figure 3.**

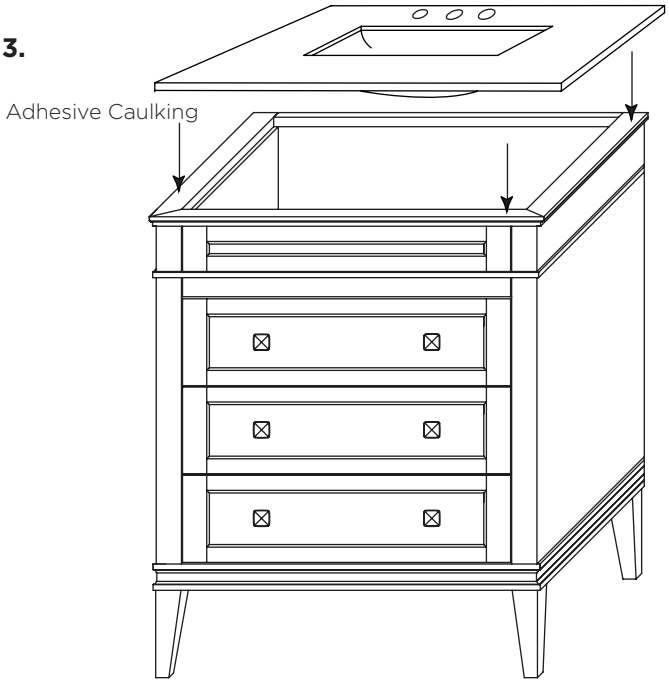

MODEL: 030323
030331

CONTEMPO COLLECTION

**NOTE:** For installing under counter sink with WideAppeal Top.

**STEP 1: DO NOT DISCARD WOODEN INSTALLATION BRACKET!**

- Make sure wooden installation bracket is safely secure
- Install under counter sink by following specific sink installation

*See Figure 1.*

**Figure 1.**

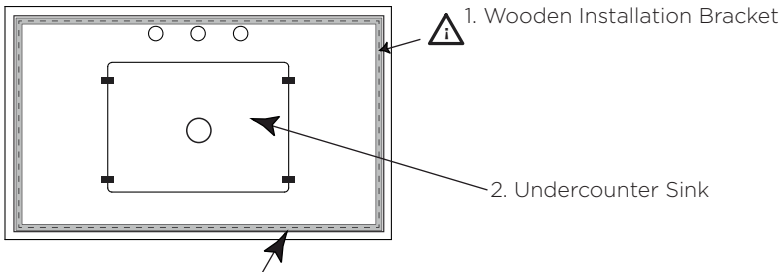


**STEP 2:**

- For best results, clean the mounting
- surfaces with a dry cleaning cloth
- To prevent over flow of adhesive, use masking tape to tape off the edges of the

**Figure 2.**

**STEP 3:** Apply adhesive on wood bracket and mounting surfaces of the cabinet

*See Figure 2.*

**Figure 3.**

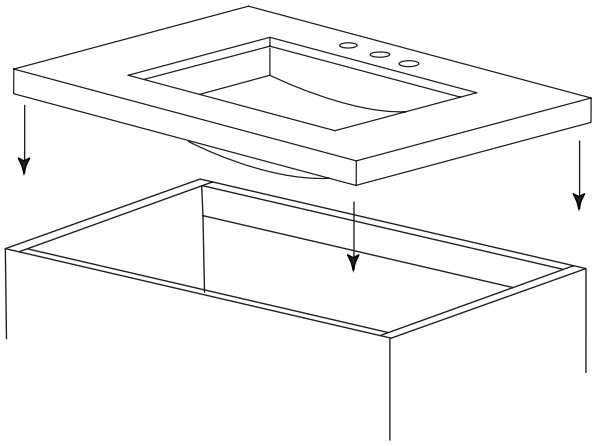

**STEP 4:** Carefully place countertop on to the cabinet, align, and press firmly

*See Figure 3.*

MODEL: 030323
030331

CONTEMPO COLLECTION

**NOTE:** For installing Ceramic Sinktop.

**STEP 1:** Place adhesive around top of cabinet.
*See Figure 1.*

**Figure 1.**

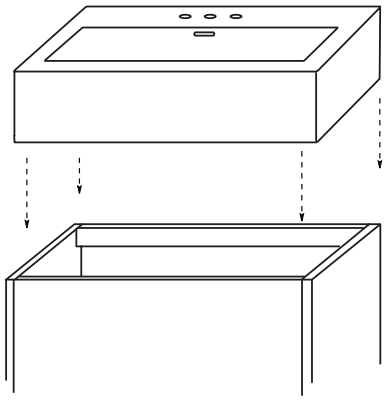

**STEP 2:** Place a generous portion of plumbers' putty under drain cap and insert whole drain body inside the bowl and through the countertop.

(There may be a small beveled rubber washer packaged with your drain, please discard this and use plumbers' putty instead.)

*See Figure 2.*

**Figure 2.**

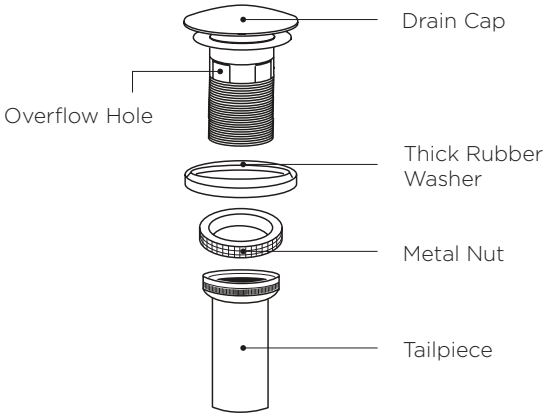


**STEP 3:** From under the drain, insert the think rubber washer and screw on and tighten the metal nut. Remove excess plumbers' putty.
*See Figure 3.*

**Figure 3.**

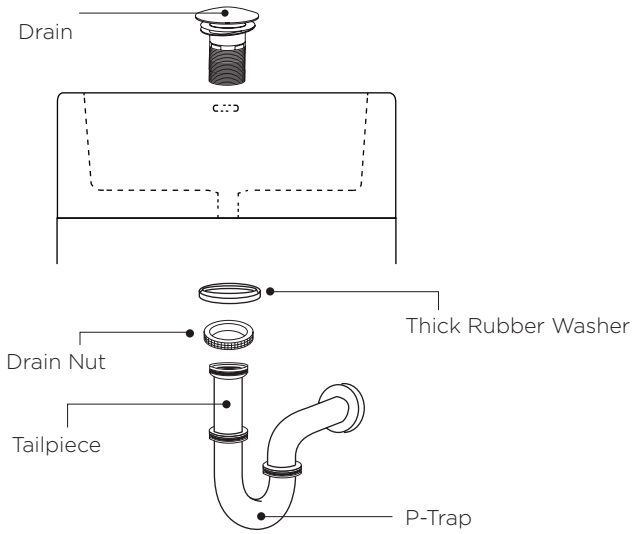


**STEP 4:** Attach p-trap to tailpiece.